ABU Adjustable Post Base

Installation

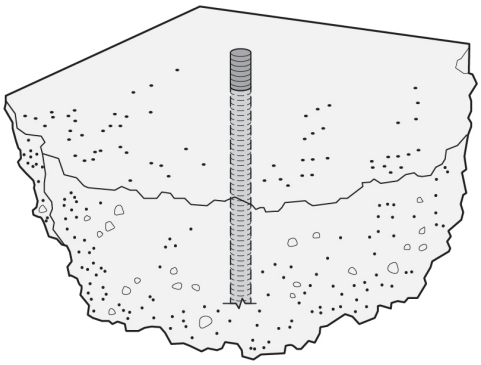

1

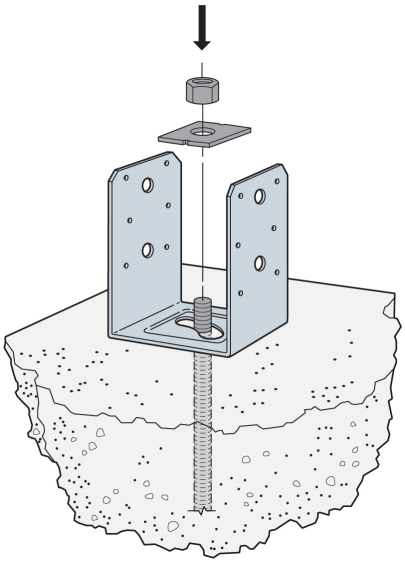

2

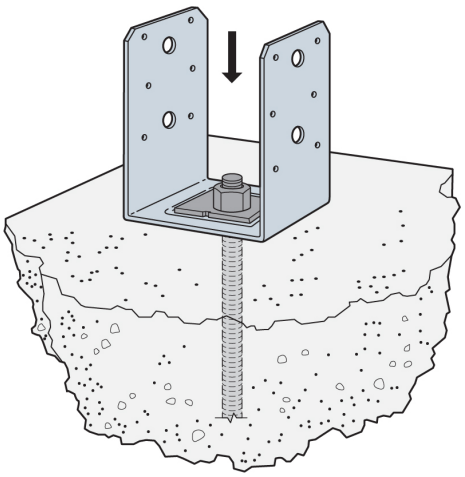

3

Simpson Strong-Tie New Zealand 52A Arrenway Drive, Albany, Auckland 0632. Phone: 09 477 4440 www.strongtie.co.nz
Simpson Strong-Tie Australia Sydney: 1/16 Kenoma Place Arndell Park NSW 2148. Melbourne: 16/40 Ricketts Road, Mount Waverley VIC 3149.
Phone: 1300 STRONGTIE (1300 787664) www.strongtie.com.au

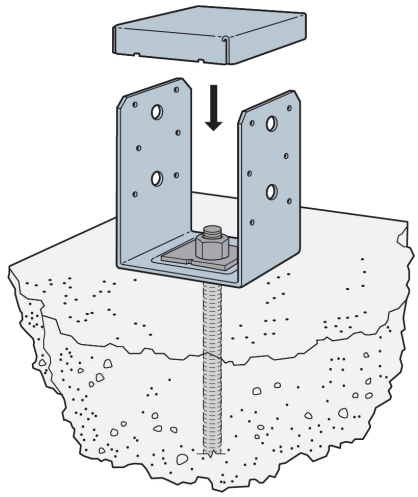

4

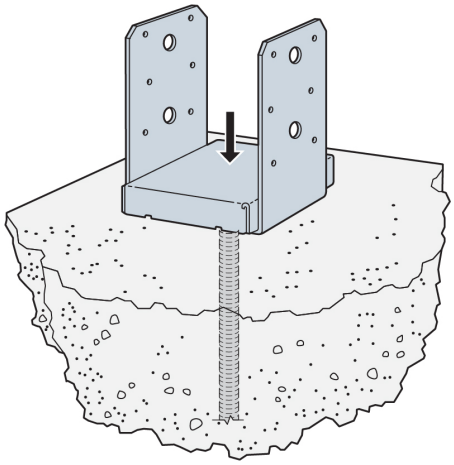

5

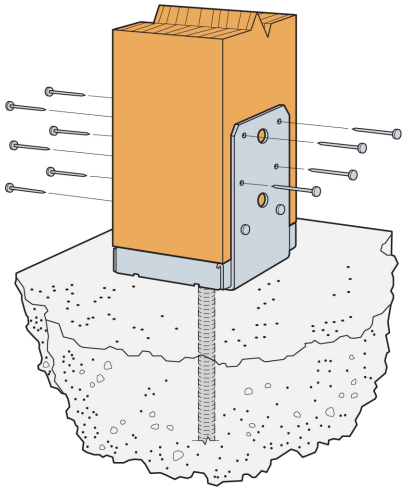

6

Nail Condition

Simpson Strong-Tie New Zealand 52A Arrenway Drive, Albany, Auckland 0632. Phone: 09 477 4440 www.strongtie.co.nz
Simpson Strong-Tie Australia Sydney: 1/16 Kenoma Place Arndell Park NSW 2148. Melbourne: 16/40 Ricketts Road, Mount Waverley VIC 3149.
Phone: 1300 STRONGTIE (1300 787664) www.strongtie.com.au

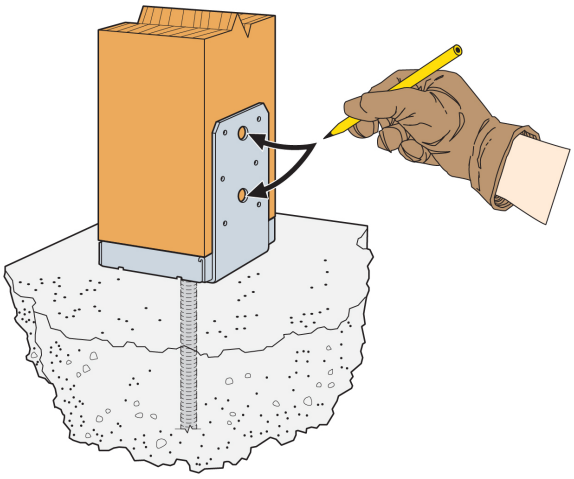

7

Machine Bolt Condition

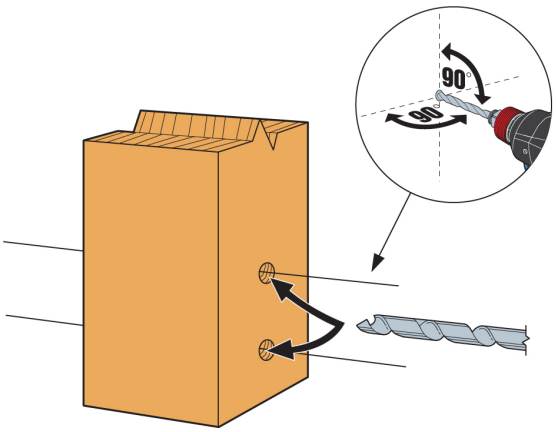

8

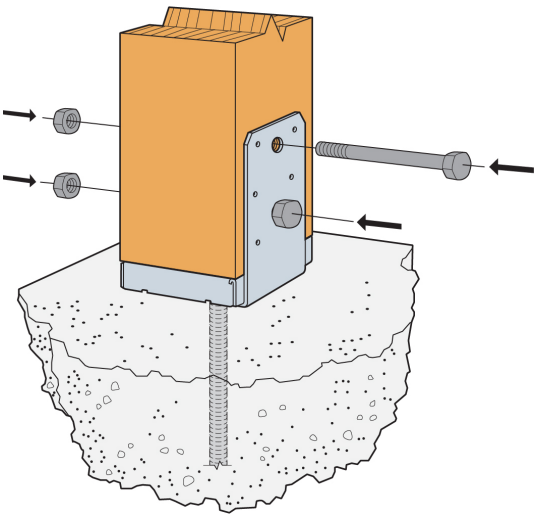

9

Simpson Strong-Tie New Zealand 52A Arrenway Drive, Albany, Auckland 0632. Phone: 09 477 4440 www.strongtie.co.nz
Simpson Strong-Tie Australia Sydney: 1/16 Kenoma Place Arndell Park NSW 2148. Melbourne: 16/40 Ricketts Road, Mount Waverley VIC 3149.
Phone: 1300 STRONGTIE (1300 787664) www.strongtie.com.au